WIRING DIAGRAM

Air Handler with Factory Installed Heat (20 kw)

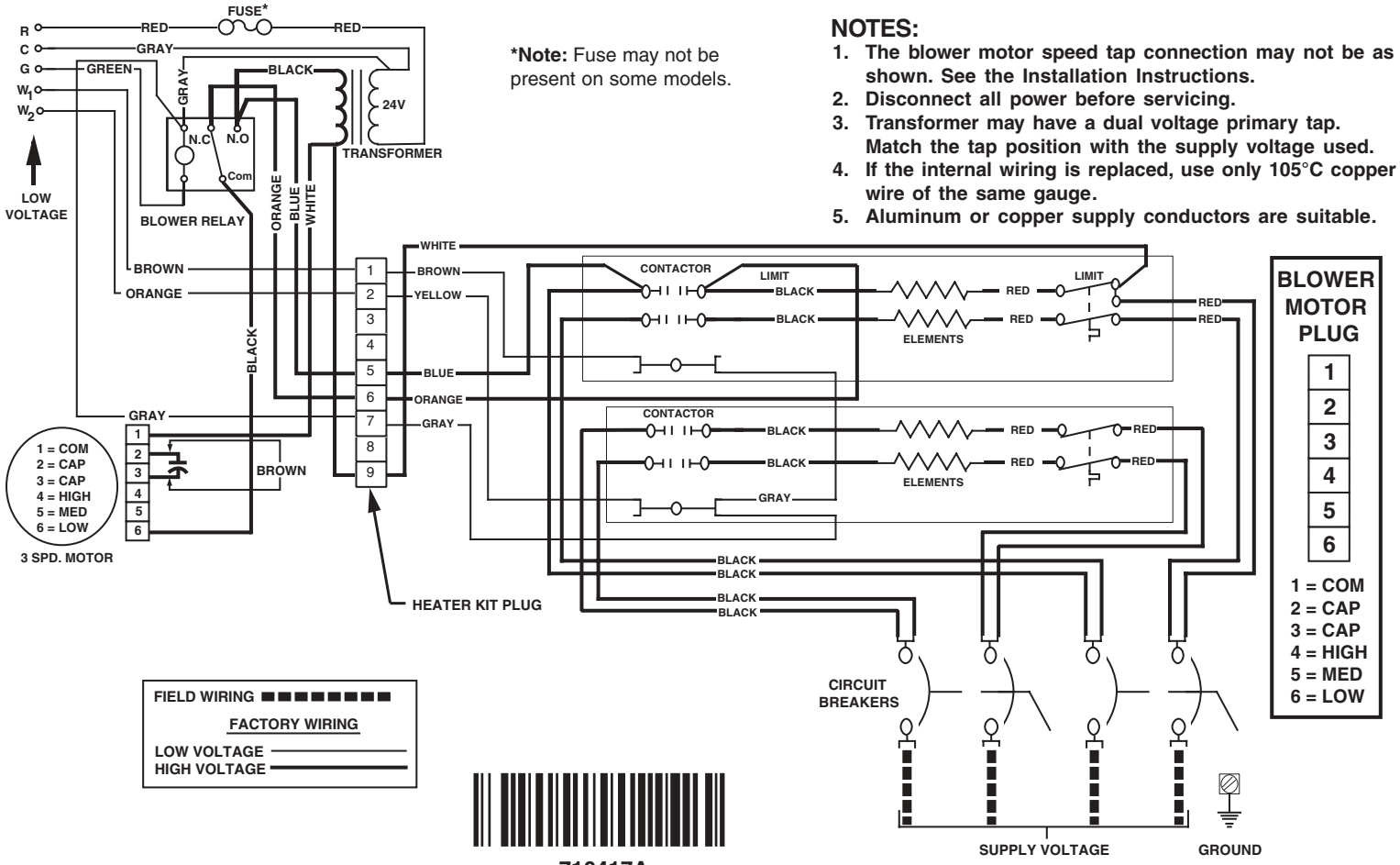

***Note:** Fuse may not be present on some models.

NOTES:

1. **The blower motor speed tap connection may not be as shown. See the Installation Instructions.**
2. **Disconnect all power before servicing.**
3. **Transformer may have a dual voltage primary tap. Match the tap position with the supply voltage used.**
4. **If the internal wiring is replaced, use only 105°C copper wire of the same gauge.**
5. **Aluminum or copper supply conductors are suitable.**

FIELD WIRING

FACTORY WIRING

LOW VOLTAGE

HIGH VOLTAGE

710417A

710417A (Replaces 7104170)